FOR MAX. SPAN	CROSSARM	
	28kV FRAMING	15kV FRAMING
75m	230cm STEEL	230cm STEEL
90m	290cm COMPOSITE	

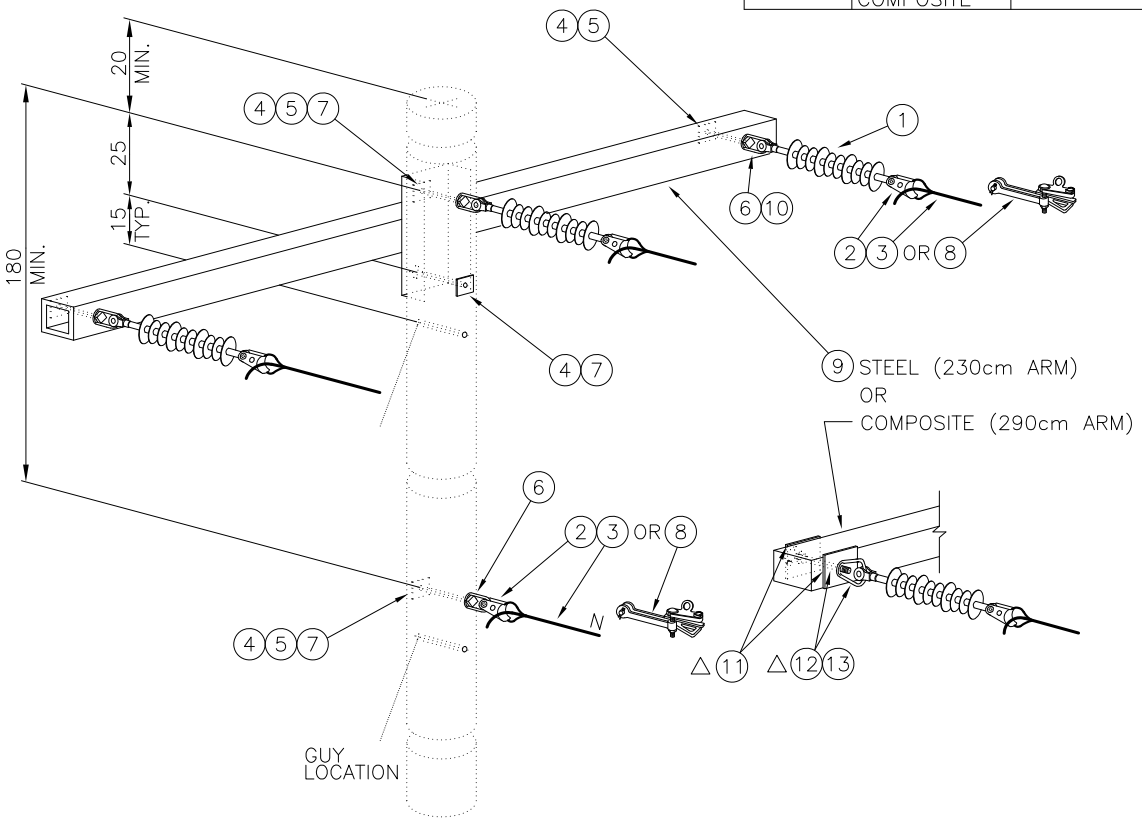

PARTS LIST				
PART No.	MM No.	DESCRIPTION	QTY. STEEL	QTY. COMP.
1	30008404 30008411	INSULATOR, DEAD-END, DS15 OR INSULATOR, DEAD-END, DS28	3	3
2	30007338	CLEVIS BAIL, DEAD-END	4	4
3	MM#	GRIP, CONDUCTOR, PREFORMED, DEAD-END	4	4
4	30001595	WASHER, 3/4" x 2" x 2"	5	3
5	10000108	LOCKWASHER, FOR 3/4" BOLT	4	2
6	10000058	BOLT-EYE, FOR 3/4" BOLT	4	2
7	MM#	BOLT, 3/4"	3	3
8	MM#	CLAMP, CONDUCTOR, BOLTED, DEAD-END	A/R	A/R
9	30000998 30033546	CROSSARM, STEEL, 7'-6" OR CROSSARM, COMPOSITE, DEAD-END, 9'-6"	1 N/A	N/A 1
10	30014474	BOLT, 3/4" x 6"	2	N/A
11	△	BACK TO BACK LARGE WASHERS	N/A	4
12	△	BACK TO BACK NUT-EYES	N/A	4
13	△	BOLT, 3/4", DOUBLE-ARMING	N/A	2

MM# = REFER TO SECTION 16 ONLY | A/R = AS REQUIRED

△ = SUPPLIED WITH EQUIPMENT | N/A = NOT APPLICABLE

ALL DIMENSIONS IN CENTIMETRES
UNLESS OTHERWISE STATED

Rev No.	Date	Revision Particulars	dwn	ckd	des	app
05	FEB 2025	UPDATED QUANTITY FOR PART# 5.	PC	MM	AA	MM
04	JUNE 2022	ADDED SWING AWAY OPTION ALTERNATIVE TO DEAD-END CLEVIS/PREFORM CONNECTION AT NEUTRAL LEVEL.	PC	MM	SP	MM

hydro one **Hydro One Networks Inc.**

© Copyright Hydro One Networks Inc. All rights reserved. This drawing may not be reproduced or copied, in whole or in part, in any printed, mechanical, electronic, film, or other distribution and storage media or used in any information storage or retrieval system outside of Hydro One Networks Inc., without the written consent of Hydro One Networks Inc.

Information contained in this drawing is considered to be confidential. Recipients shall only use the drawing for its intended purpose and shall take necessary measures to prevent disclosure or transmittal to outside parties.

Drawn By:	Checked By:	Designed By:	Design Approved By:
WB	PC		
Scale: N.T.S.	Date: (yyyy/mm/dd) 2011/08/25	Pole ID:	

Title: PRIMARY 3-PH DEAD-END CROSSARM (FLAT)
3ø, 2.4/4.16kV TO 16/27.6kV

Drawing No. DL3-110.3-0500 Rev. No. 05

A4 (210 x 297) millimetres 0 10 50 Sheet Number: /

TITLE BLOCK REV 02 - AUGUST 2014